rotork®

K-TORK Range

High-performance quarter-turn
pneumatic actuators and controls

Redefining Flow Control

Contents

Section	Page
Introduction	3
Product Overview	4
Modular Design	5
Double-Acting Actuators	6
Spring-Return Actuators	7
Industrial Applications	8
Municipal Applications	9
Municipal Pump Control Applications	10
Open / Close Controls	11
Modulating Controls	12
RANGER CG Corrosion-Guard	13
K-TORK Kost-Saver System	13
Retrofit & Linkage Kits	14
Bus Networks	16
Gears & Air Fail-Safe Actuators	17
Performance Data	18
Model Number Designation	19
Torques and Dimensions	20
Accessories	22
Rotork Site Services	23

Rotork is the global market leader in valve automation and flow control. Our products and services are helping organisations around the world to improve efficiency, assure safety and protect the environment.

We strive always for technical excellence, innovation and the highest quality standards in everything we do. As a result, our people and products remain at the forefront of flow control technology.

Uncompromising reliability is a feature of our entire product range, from our flagship electric actuator range through to our pneumatic, hydraulic and electro-hydraulic actuators, as well as instruments, gear boxes and valve accessories.

Rotork is committed to providing first class support to each client throughout the whole life of their plant, from initial site surveys to installation, maintenance, audits and repair. From our network of national and international offices, our engineers work around the clock to maintain our position of trust.

Rotork. Redefining flow control.

Introduction

K-TORK Actuators + Controls represent the future of valve automation. The vane actuator is a 'True Rotary' actuator that does not require the conversion of a linear motion to a rotary motion. The result is a simple, highly accurate and reliable quarter-turn pneumatic actuator.

K-TORK Actuators + Controls are versatile, modular and available in both double-acting and spring-return configurations. They are used to operate ball, butterfly or plug valves, and other 90-degree rotating mechanisms.

The quarter-turn valves and actuators found in filtering and pumping processes, most of all, must be reliable. The actuators must reduce routine, preventative and emergency maintenance, while simple to troubleshoot if necessary. The actuators must also provide accurate control and shut-off to ensure clean drinking water and safe effluent used for irrigation and to replenish our lakes, rivers and reservoirs. Also, today's flow control equipment must be affordable and provide a measurable return in the form of less downtime, lower energy consumption and overall cost-of-ownership.

Water and wastewater plant owners and operators have described the frustrations experienced with "old style" pneumatic (or water-operated) cylinder actuators and with complex electric actuators. K-TORK 'True Rotary' vane-type actuators solve the problems associated with both.

K-TORK INTERNATIONAL, INC

Product Overview

True Rotary Actuator

K-TORK Actuators do not convert linear motion to rotary motion. There is no sideload transferred to the actuator housing or valve stem, resulting in true rotary control and increased life expectancy of butterfly, ball and plug valves.

Compact / High Torque Output

K-TORK Actuators provide high-torque output in a small size. The vane actuator design is compact and centers the actuator over the valve, eliminating stress on the valve body and stem.

Efficiency and Long Life

Unmatched service life is the result of the dual-opposed lip seal design. The stainless steel expanders energize the lip seals to the housing for constant, leak-free years of performance.

Modulating Accuracy

There is no lost motion or hysteresis in the K-TORK actuator, resulting in highly accurate modulating specifications of 0.25% or better. Typical rack-and-pinion, scotch-yoke and other piston actuators experience "slop" in the gears, crank arms and pivot points. Additionally, the dual-opposed lip seals are low friction, reducing or eliminating "stick-slip" and "hunting".

Modular Design

K-TORK Actuators provide a simple, proven method to mount fail-safe springs, manual overrides and control accessories. The components can be added or removed, serviced or upgraded while mounted to the valve.

Easy Accessory Mounting

Integral NAMUR dimensions conform to VDI/VDE 3485 for top-mounted control accessories and NAMUR solenoid interface eliminates fittings and tubing from solenoid valve.

Environmental Protection

K-TORK actuators meet NEMA 4/4x IEC IP66M and IP67M specifications for submergence and high-pressure water test. The spring housing is sealed from the environment, supply air and moisture.

Future-Proof Controls

K-TORK actuators will stand the test of time. As controls evolve from pneumatic to electric to analog to digital to bus networks and to wireless, the actuator will remain. Controls can easily be upgraded onto the same actuator over time.

Asset Management / Cost of Ownership

Initial purchase price is only the first component to cost. K-TORK actuators will provide the lowest installed and life cycle cost in demanding Open / Close and Modulating applications. Reduce commissioning time, unplanned maintenance, downtime, routine maintenance, conduit and wiring, power consumption and outside service costs.

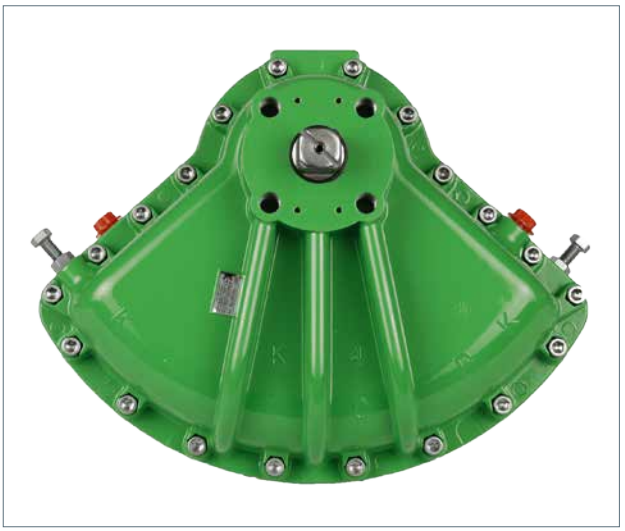

Safety

The K-TORK spring-tension safety-band (patent-pending) allows for the safe installation or removal of the spring from the actuator. The spring fail direction can be changed from CW to CCW using the same spring, providing flexibility and reducing inventory levels.

"No O-ring" High-Cycle Design

The low-friction polyurethane or K-Seal High-Temperature lip seals in each actuator will provide years of trouble-free operation. There are no pressure-retaining o-ring seals, which are prone to leak, increase friction and lower service life, in a K-TORK actuator.

Industry-Leading Warranty

K-TORK Vane actuators are backed by a three-year / 2-million stroke performance warranty.

With only one moving part, K-TORK provides a range of benefits:

- Compact, space-saving design ideal for membrane or packaged plants, filter galleries and vaults
- Designed for high-cycle and precise modulating services
- Linear and constant torque output
- Rated for temporary submergence
- Complete range of pneumatic, discrete, analog and digital controls
- Fail-Closed, Fail-Open or Last-Position upon power loss
- No high-voltage power or MCCs required
- Adjustable OPEN / CLOSE speed control
- 100% duty-cycle, immune to thermal overload
- Refined retrofit process to upgrade existing valves

Modular Design

Open / Close Controls

1 Informer® limit switch

Model INF-A, economical valve position feedback, visual indicator.

2 Informer® limit switch

Model INF-B, Heavy-Duty mechanical, proximity, solid state, analog valve position feedback and bus network communications, rated for General Purpose and Hazardous Areas, visual indicator.

3 Sidewinder® solenoid valves

NAMUR and Remote Mount, manual override, various voltages and environmental ratings.

4 Exhaust speed controls

Provide independent actuator travel speed adjustments.

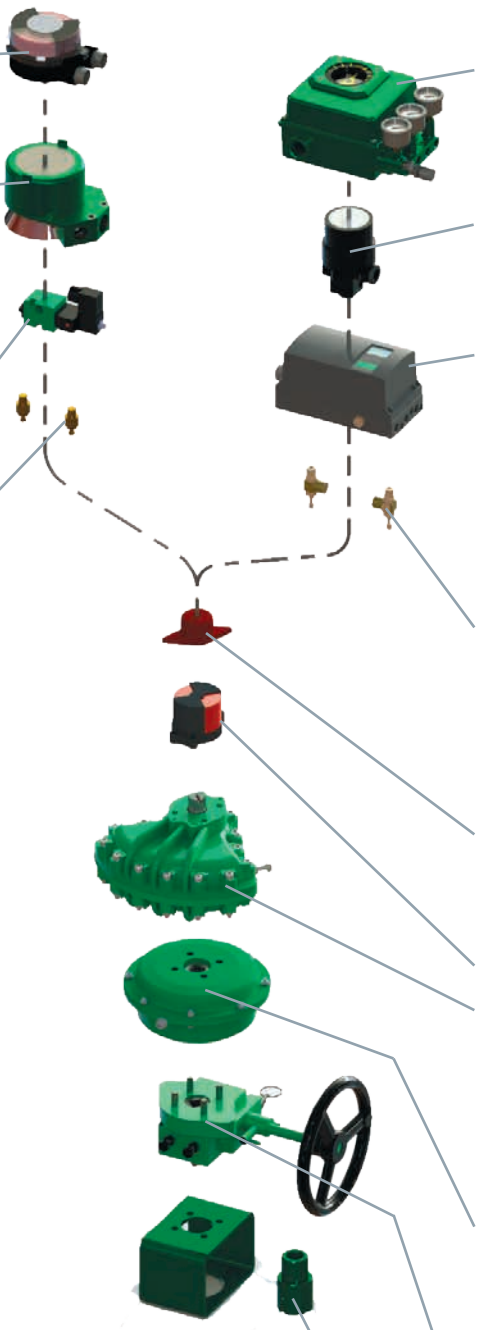

Modulating Controls

5 C-400 Conventional positioner

Pneumatic and electro-pneumatic, internal limit switch and analog position feedback, visual indicator.

6 XP-1000 I/P converter

Rated for General Purpose and Hazardous Areas.

7 S-800 "SMART" digital positioner

Virtually zero air bleed, auto-calibrate, diagnostics, bus network capable (HART®, Profibus® or Foundation Fieldbus®), Emergency Shutdown and Partial-Stroke capable.

8 Inline speed controls

Independent actuator travel speed adjustments.

Mechanical Options

9 Basic valve position indicator

Sizes K-4 and smaller.

10 Enhanced valve position indicator

11 K-TORK® High-Performance 'True Rotary' actuator

Torque output up to 150,000 in/lbs, dual travel stops, 80°-100° adjustable travel stops, NAMUR interfaces. Size K-4 and smaller.

12 Fail-Safe spring-return

Adjustable to meet air supply, totally-enclosed, manual and fusible-link versions available, safety band (patent-pending), reversible rotation for Fail-Close or Fail-Open applications.

13 De-Clutch manual override

To mechanically position valve independent from actuator. Can operate the valve with vane actuator removed.

14 Linkage kits

To fit actuator to new or existing valves. High-quality construction.

Accessories/Options:

- ESD Partial Stroke
- Air Filter Regulators
- Locking Devices
- Manual Fail-Safe Springs
- Fusible-Link Fire Fail-Safe Springs
- Bus Network Communication
- Stem Extensions
- High-Temperature Valve Automation

Double-Acting Actuators

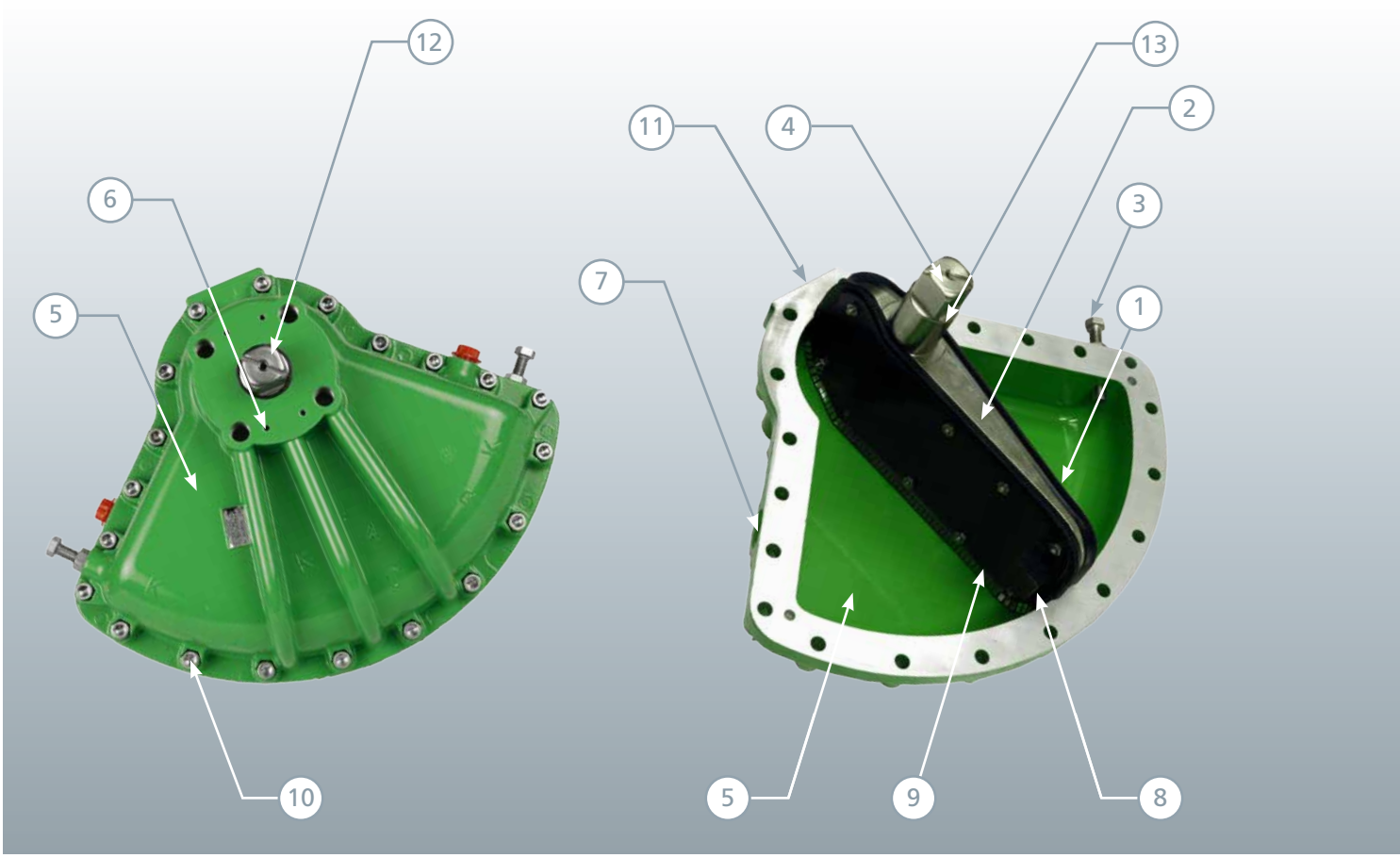

1 Dual Opposed Lip Seals

Provides effective, air-assisted seal for low-friction and long, maintenance-free life.

2 Integral Vane / Shaft Casting

Cast as a single piece; only one moving part. Eliminates all "slop" or hysteresis.

3 Bi-Directional Travel Stops

80° to 100° standard adjustments, stainless steel, extended travel stops available.

4 Alloy Steel Drive Shaft

High tensile output shafts for strength and durability, ENP finish for corrosion-resistance.

5 Corrosion-Resistant Finish

Durable TGIC-Polyester Epoxy powder-coat finish, inside and out.

6 Integral Namur Accessory Mount

Meets VDI/VDE 3485 accessory mount standards for positioners, limit switches and indicators.

7 Large Air Inlet Port for Fast Operation

Provides for high-cycle speed of operation with no restrictions.

8 Steel Side-Plate Seal Retainer

Provides the strength to assure accurate Open and Close stop positions.

9 Stainless Steel Seal Expanders

Ensures long-term lip seal-to-case contact. Excellent in both high-cycle and low-cycle applications.

10 Stainless Steel Bolting Hardware

For long-term corrosion resistance.

11 Integral Namur Manifold

For direct-mount solenoid valve, eliminates fittings and tubing.

12 Wrench Manual Override and Vane Position Indicator

13 No Shaft Seal Required

Lipseals isolate output shafts from supply air.

Spring-Return Actuators

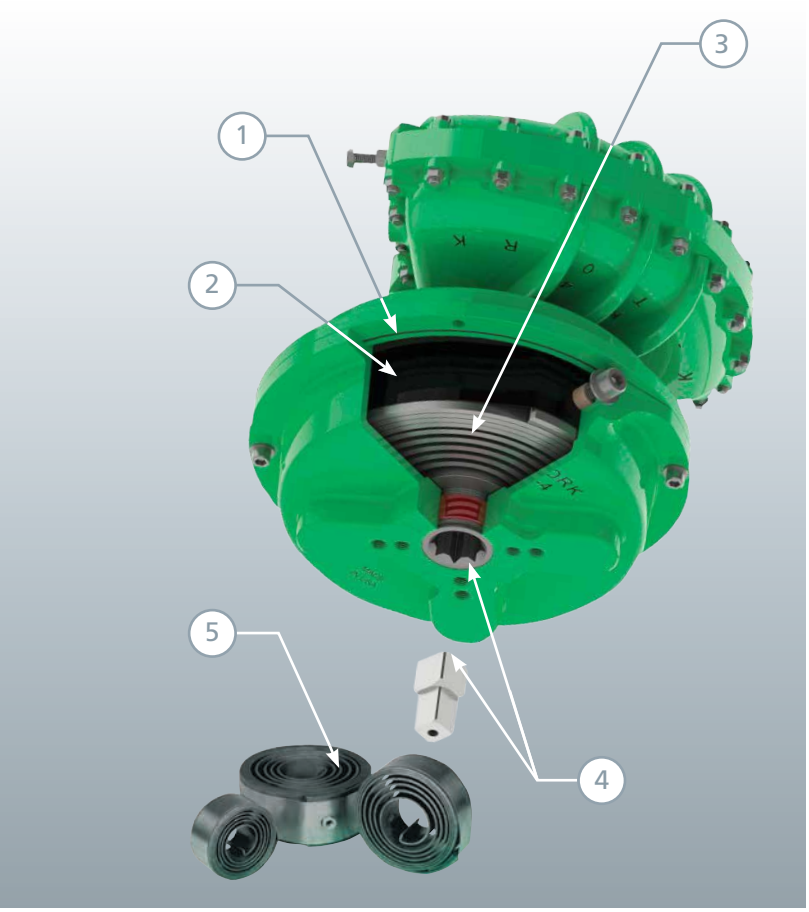

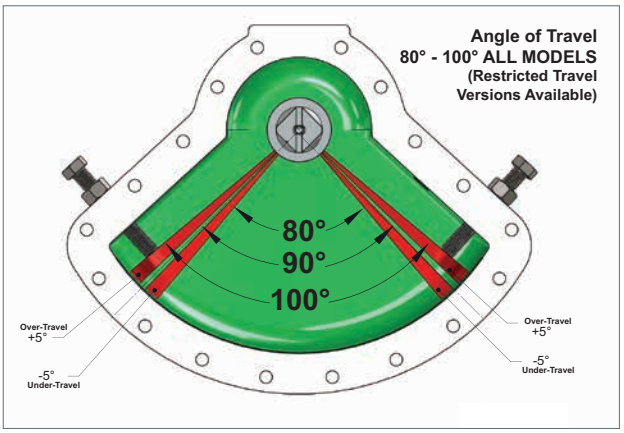

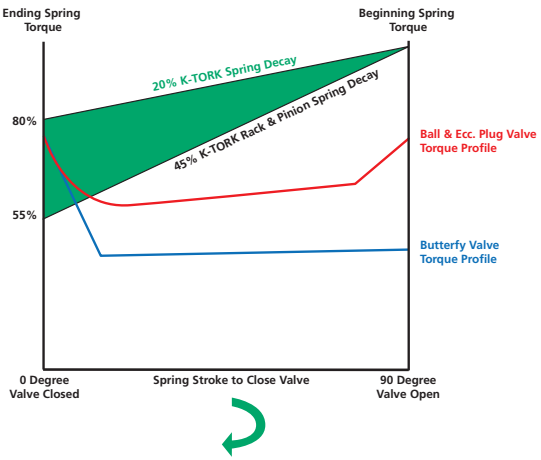

1. Totally Enclosed / O-Ring Sealed

Non-breathing spring is protected externally from environmental corrosion and internally from supply air and atmospheric air contaminants. Eliminates the need for re-breather systems.

2. Safety

Spring includes steel safety band (patent-pending) around spring perimeter, allowing safe removal from housing Corrosion-Resistant Finish Durable TGIC-Polyester Epoxy powder-coat finish with stainless steel fasteners, Ranger CG coating optional.

3. Low Torque Loss

Low-stress clock spring limits torque loss to approximately 20% through 90-degree stroke.

4. Dual Output Drive

Spring standard with ISO 5211 ‘star pattern’ female drive and ISO mount flange coupled with matching actuator bolt circle. Optional male drive insert to match actuator drive shaft.

5. Reversible Fail Direction

Spring may be removed from housing and flipped to reverse fail direction for flexibility, reducing stock requirements.

6. Modular Design

Spring can be added to double-acting actuator, reducing stock requirements.

7. Reliability and Longevity

Spring is guaranteed for the life of the actuator.

8. Balanced Torque Output

Spring tension adjusted to match actuator air supply, providing balance air / spring torque output.

The low torque loss associated with K-TORK spring-return actuators may result in smaller actuator selections and cost savings. See the torque profiles for typical ball, plug and butterfly valves and the corresponding increased torque output of the K-TORK actuators when compared to rack-and-pinion style actuators.

Industrial Applications

Demanding Industrial Applications

The K-TORK Range of high-performance actuators is well-suited for the most demanding industrial applications. The K-TORK vane actuator is a True Rotary Actuator, which eliminates side-load, linkage arms, gears, cranks and pivot points.

Feature	Benefit
One Moving Part	Simple design / No lost production or downtime.
Dual-Opposed lip seals	High-cycle reliability, no O-rings to leak or wear out.
NAMUR interfaces	Standardized control accessory mounting.
Compact size	High-torque output in a small package. Easy to handle and install.
High-Temperature option	Ideal for ambient environments up to +300 °F (+150 °C).
Modulating accuracy + no hysteresis	Replaces diaphragm actuators on ¼-turn control valves with no loss of performance.
Large air ports + no air restrictions	Capable of very fast cycle times.
Modular design	Easy to convert double-acting to spring-return; reduces stock.
150 PSI (10 bar) working pressure rating	Reduce actuator cost and size if higher air pressure is available. Engineered safety margin.

- K-TORK actuators eliminate the problems found with other actuator designs that struggle in high-cycle applications, such as Pressure Swing Absorption (PSA) and Reverse Osmosis (RO) systems and packaging equipment.
- The low-friction design provides the accuracy required for V-ball, segmented-ball and high-performance butterfly control valves that is not available in traditional "linear-to-rotary" actuator designs.
- High-temperature option ideal for steam valves and thermal transfer fluids where transient heat reduces the seal life in traditional actuator designs.

Industries

- Refining
- Petrochemical
- Oil and Gas
- Desalination and RO
- Brewery and Winery
- HVAC
- Pulp and Paper
- OEM
- Power Generation
- Food and Beverage
- Pharmaceutical
- Cement and Lime
- Mining and Materials
- Mobile Equipment
- Steel and Aluminum
- Glass Manufacturing

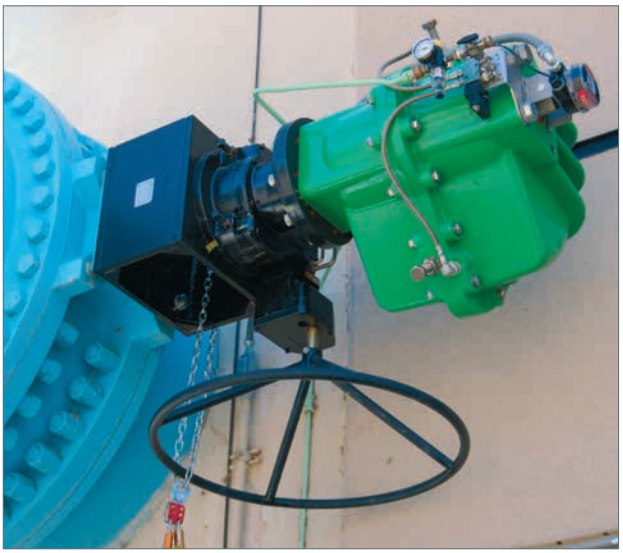

Municipal Applications

Optimizing Valve Performance

K-TORK pneumatic actuators will operate butterfly, ball and plug valves in both basic OPEN / CLOSE service and in the most precise MODULATING applications. Our diverse range of valve controls has been designed to help you maximize the performance and reliability of your treatment and distribution systems.

K-TORK actuators will enhance productivity and lower operating expenses in applications such as:

Water Treatment

- High-Service and Low-Service Pump Control
- Membrane and Ultra-Filtration
- Conventional Filter Gallery
  - Influent
  - Effluent
  - Backwash Isolation and Control
  - Drain or Waste
  - Surface Wash
  - Air Scour
  - Filter-to-Waste
- Sludge Blowdown
- Raw Water Inlet

Wastewater Treatment

- Tertiary Filters
- Reclamation Plants
- Blower Inlet / Outlet Isolation and Control
- Aeration Basin Isolation and Control
- Pump Control
- Ozone Control Valves
- Diverter Valves
- Gas-Recovery Valves
- Solids-Handling Valves
- Chemical Feed Valves
- Odor Control Valves
- Chlorine Valve Control

The Retrofit Process and Ongoing Support

Upgrade the performance of existing valves with K-TORK and our refined retrofit process. A trained K-TORK Representative will complete a Field Survey to evaluate and measure for mounting parts, clearances, connections and operator interface. 3-D models will be completed to assure proper fit and function, linkage kits will be fabricated by K-TORK and installation services are available. No matter the age of your existing valve, K-TORK can upgrade the performance and reliability with a new actuator that will interface with your SCADA or control system now and in the future.

Industry Compliance

K-TORK actuators are fully compliant with:

- ANSI/AWWA #C-540-02 and #C-541-08 Standards for Hydraulic and Pneumatic Cylinder and Vane-Type Actuators
- Certified for ARRA 'Buy American' provisions
- CE, FM or CSA Approved electrical components
- NAMUR VDI/VDE 3458 Accessory mount standards
- ISO 5211 drive dimension standards on all spring-return models

Municipal Pump Control Applications

The K-TORK actuator has an equal area on each side of the vane and a very low-friction design that is ideal for pump control applications.

K-TORK actuators can be mounted to new or existing valves to provide surge and water hammer control common with the starting and stopping of pumps. Energy savings will occur as the pump control actuator is sequenced with the pump motor, keeping the pump operating on its characteristic curve.

Standard features:

- Precise, independent Open and Close speed control, field adjustable
- Emergency Shutdown for "uncontrolled" stoppage of the pump
- Basic discrete contact initiated Open and Close
- Integral solenoid valve to accept Open or Close command
- Fail-Close upon power outage
- Manual override push-button on solenoid valve
- Position indicating switches, (2) or (4) SPDT contacts
- High-visibility valve position indicator

Options include:

- Analog input command signal
- Analog valve position transmitter
- Mechanical de-clutch manual
- Override and hand wheel
- Rapid-close feature
- Pneumatic supply line filters
- Integral or remote mount controls

Eliminate:

- Dangerous high-voltage power used to supply electric actuators
- High-pressure hydraulic systems
- Leaking water cylinder actuators
- Hydraulic fluid leaks

There is a recognised need to protect discharge pumps and piping systems from reverse flow and water hammer. A two-speed valve control system is generally utilised; a slow speed that inhibits hydraulic shock for normal operation, and a faster close speed for ESD (emergency shutdown).

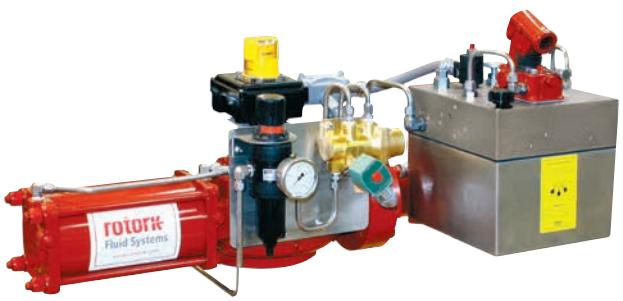

Rotork has developed a simple, yet effective and dependable actuator package for pump control valves. By use of a specially designed hydraulic manifold, the complex control circuit piping and its many potential leak points is eliminated.

Design features and benefits

- Standardised system for all fluid power actuators
- Simple cost-effective solution
- Few connections, less potential leak points
- Can be retrofit to existing installations
- Very simple operation
- Precise adjustable speed control with separate controls for Open, Close and ESD

Open / Close Controls

Open / Close Controls SIDEWINDER® Solenoid Valves

The K-TORK Sidewinder® range of solenoid valves are used primarily on 2-position, Open / Close applications. The solenoid valve can be directly mounted and ported to the actuator using the NAMUR interface on sizes K-4 and smaller and bracket-mounted on sizes K-5 and larger. Remote mount of the solenoid is available for all actuator sizes.

Features and Options

- Detent-style manual override pushbutton to "lock-and-hold" the valve in the open or close position upon power outage
- High Cv (1.35 SCFM) flow factor for fast operation
- Anodized aluminum body
- Temperature rated -5 to +125 °F (-20 to +52 °C)
- Dual exhaust ports for independent speed control
- FM, CSA, CE and UL Approved
- NEMA 4 (IP65) and NEMA 7 (EEx eII T6), Class 1 / Div. 2 Hazardous Area Classifications
- Single-coil and dual-coil (2-position and 3-position) options
- Voltage options include VAC 24, 115 and 230 / VDC 12, 24 and 115
- Low-power 24 VDC available for Bus Network applications

Informer® Limit Switches

The K-TORK Informer® range of limit switches and valve communication terminals are used primarily on 2-position, Open / Close applications. The limit switch or bus network device provides both valve position feedback and other diagnostic information to the control system. All units attach to the top of the actuator via the NAMUR interface.

INF-A Platform

- Mechanical switches, rated 10A @ 125/250 VAC
- High-visibility valve position indicator
- Quick-set cams, no tools required
- Corrosion-resistant Engineered Resin enclosure
- CE and CSA Approved, NEMA 4/4X (IP65) General Purpose

INF-A

INF-B Platform

- Wide range of mechanical, proximity, solid state and bus network communication options
- Space-saving, high-visibility valve position indicator
- Quick-set cams, no tools required
- Corrosion-resistant Marine-grade aluminum enclosure, TGIC-Polyester powder coat finish
- FM, CSA, CE and UL Approved, NEMA 4/4X (IP65) and NEMA 7 (EEx eII T6), Class 1 / Div. 1 & 2 Hazardous Area Classifications

INF-B

Modulating Controls

S-800 Digital Valve Positioner

The K-TORK S-800 SMART Digital positioner is used for precise modulating and control applications. This State-of-the-Art device mounts to the actuator via the NAMUR interface on all sizes. Designed for a wide variety of hostile environments and demanding applications, the S-800 provides user-friendly set-up and years of trouble-free service.

Features and Options

- Auto-calibrate commissioning and set-up
- Virtually ZERO AIR CONSUMPTION in resting state
- Push-button manual override and configuration
- LCD display for valve position, alarm and configuration status
- Diagnostic capabilities include:
  - Operating hours, total valve cycles and temperature history
  - Changes in actuator travel, cycle time and actuator leakage indicator
  - Many other diagnostic features
- Analog or bus network inputs
- Corrosion-resistant Makrolon enclosure
- Mechanical and Inductive limit switch feedback
- Analog output transmitter for continuous valve position indication
- Fail-in-Place option and integral speed controls standard
- Temperature rated -20 to +175 °F (-28 to +80 °C)

C-400 Conventional Positioner

The K-TORK C-400 is a rugged, easy-to-calibrate positioner suitable for pneumatic or analog input signals. The modular design provides for the simple addition of an integral I/P converter, mechanical or proximity limit switches, analog output transmitter or ohm potentiometer output transmitter, all inside the same enclosure.

Features and Options

- Mounts to actuator via the NAMUR interface on all actuator sizes
- NON-INTERACTIVE Zero and Span adjustments for fast and accurate calibration
- High-visibility valve position indicator
- Field-reversible for direct or reverse acting
- Suitable for both double-acting and spring-return actuators
- Rugged all-metal construction and internal working parts
- Linear, Equal-Percentage and Quick-Open cams included with each unit
- Standard temperature rated -40 to +185 °F (-40 to +85 °C)
- High-temperature rated -40 to +300 °F (-40 to +148 °C)

RANGER CG Corrosion-Guard Finish

RANGER CG Corrosion-Guard finish greatly extends the life of valve actuators in highly-corrosive environments. Housing and vane treated both inside and out while the Ranger CG system treats all internal threads and cavities.

Applications and Installations

- Chemical and Petrochemical plants
- Chlorine-rich environments
- Offshore and Coastal environments
- Caustic Washdown areas

The K-TORK RANGER CG actuators are designed to provide maximum protection in aggressive corrosive environments. It all starts with the K-TORK high-performance rotary vane actuators. The cast aluminum body and alloy steel vane are treated with a thermosetting tripolymer resin coating system formulated for mechanical components requiring corrosion-resistance and surface lubrication.

Once applied, the RANGER CG system provides an armored layer of protection against a wide range of acids, caustics, alkalis, solvents and salt-laden (coastal refining, offshore & desalination) environments. The RANGER CG system can be provided on all K-TORK actuator and spring-return models. Note that the K-TORK spring-return is totally sealed.

The non-vented spring housing and spring are not subject to compressed air or atmospheric contaminants or moisture.

Corrosion-Resistant Valve Communication Options

- K-TORK Informer® limit switch, NEMA 4/4X/6 (IP 67), manufactured entirely in corrosion-resistant Polycarbonate and stainless steel materials. Includes visual valve position monitoring.
- K-TORK S-800 SMART Digital positioner, HART communication, analog input / output, end position feedback, auto calibration, LCD visual indicator.

K-TORK Kost-Saver System

The K-TORK Kost-Saver system simplifies a standard OPEN / CLOSE automated valve field installation.

The package includes a K-TORK actuator, NAMUR-mount Informer® limit switch, NAMUR-mount SIDEWINDER solenoid valve and wiring cable between solenoid coil and limit switch. Solenoid coil wires are terminated inside the limit switch housing, providing the user with a clean, efficient final installation.

The Informer® limit switch directly attaches to the actuator without a coupling.

Benefits

- Mount to any quarter-turn valve
- Eliminate additional conduit run to solenoid coil
- Terminate both control and monitor wiring inside limit switch housing
- Eliminate one junction box at each valve assembly
- Eliminate costly fittings and tubing, which are easily damaged during transit or installation
- Standardize field wire terminations to reduce mistakes and expedite commissioning

DIN Plug Solenoid Disconnect

Solenoid Coil wired to Limit Switch Terminals

Retrofit & Linkage Kits

Retrofit

K-TORK is most qualified in the retrofit of K-TORK actuators to existing quarter-turn valves. In many cases, K-TORK high-performance actuators replace old-style cylinder actuators, rack-and-pinion actuators and scotch-yoke actuators that are obsolete and that do not provide the service life or accuracy needed for an application.

K-TORK maintains a database of over 5,000 linkage kit designs to facilitate the adaption to existing valves of any make or generation.

The Process

- Indentify the brand, size, pressure class and model number of the existing valve.
- If necessary, a K-TORK Representative will complete a field survey to verify and determine the dimensions necessary to fabricate the linkage kit. K-TORK can also provide a simple fill-in-the-blank form so that the customer can easily provide the needed dimensions.
- If necessary, K-TORK will provide a 3-D model to the user to confirm actuator orientation, access to process connections and convenient operator access to controls and indicators.

Before

After

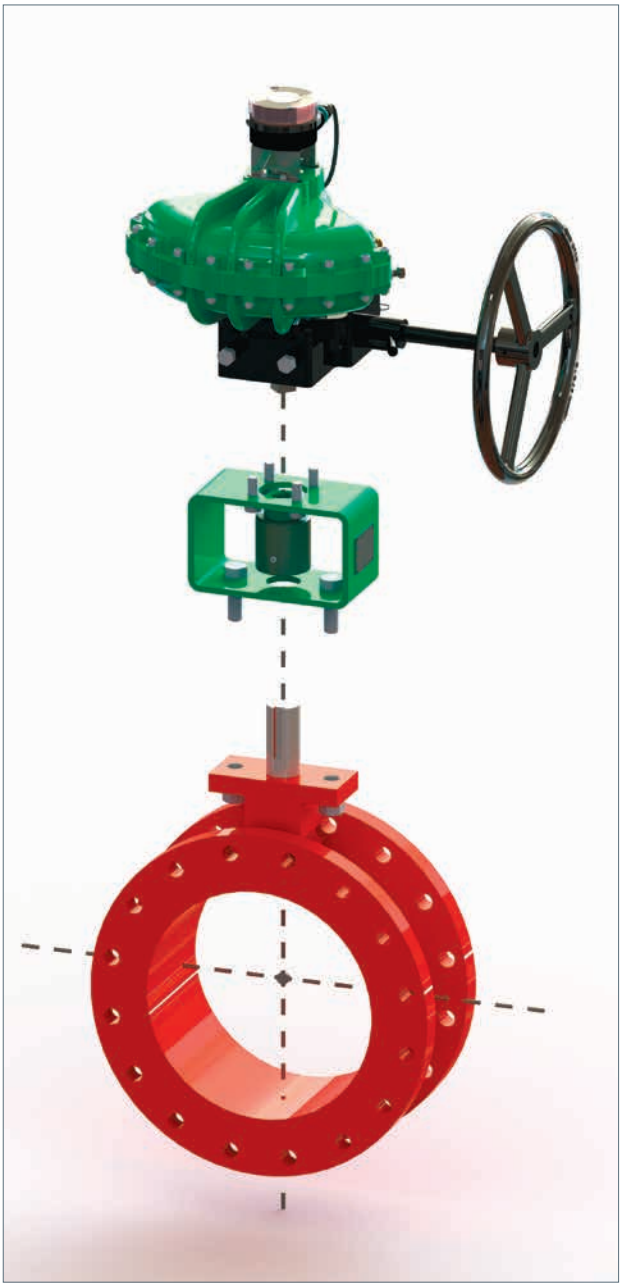

Retrofit & Linkage Kits

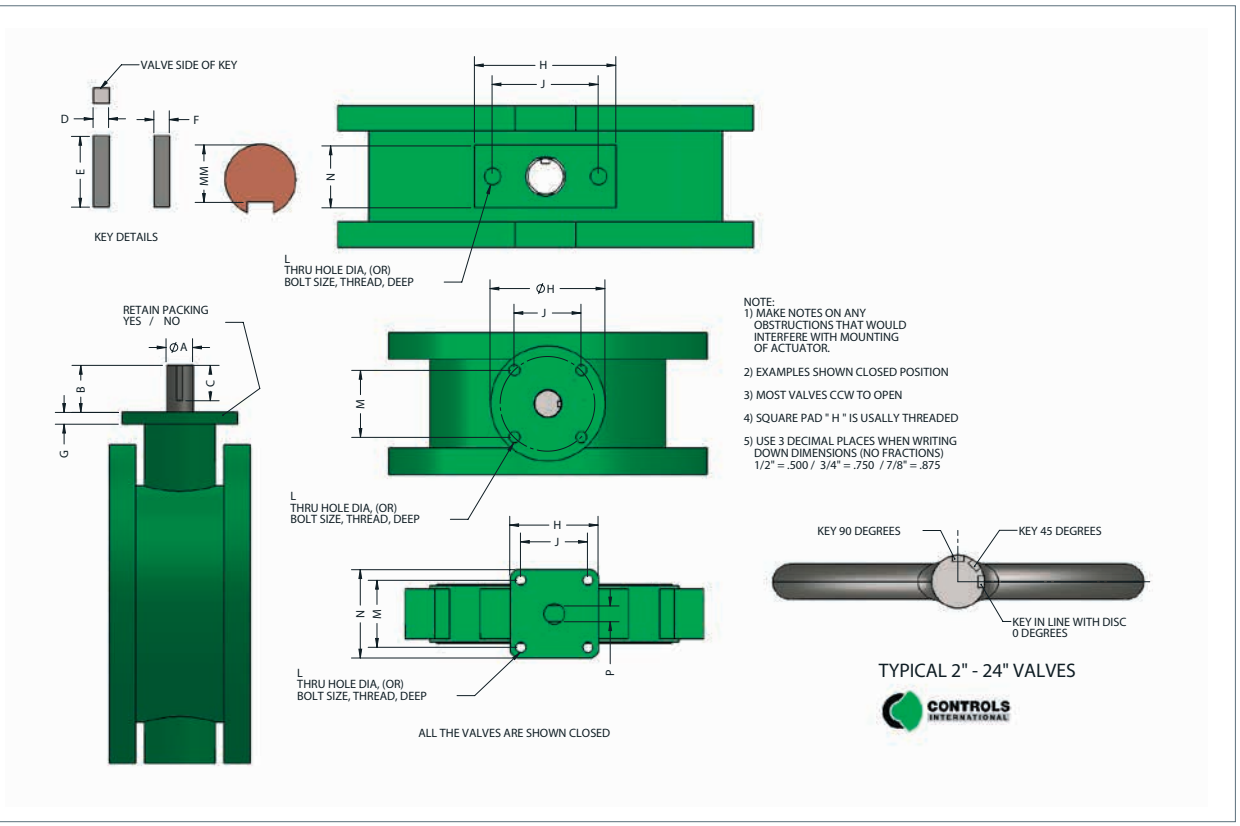

Linkage Kits

The linkage kit between the valve and the actuator is a critical component that can directly influence the life expectancy and performance of both the valve and the actuator. With 35+ year's experience, K-TORK is confident that we can provide the fabricated parts to adapt K-TORK actuators to most any quarter-turn valve.

K-TORK linkage kits are designed to high standards and include the same corrosion-resistant finish as the actuator. Our linkage kit database includes kits for both old-style, discontinued valves and current production valves.

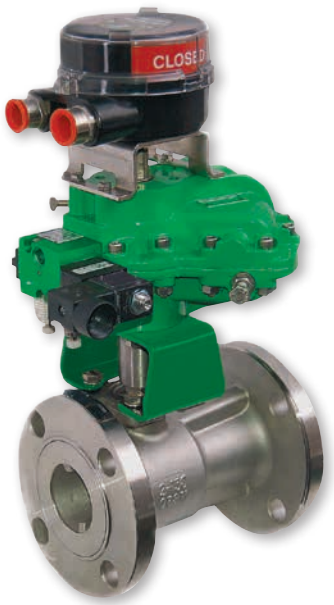

Bus Networks

Bus Network Systems

K-TORK actuators can be supplied to interface with a variety of industry-standard 2-wire or 4-wire Bus Network protocols that transfer both monitoring & control AND power to each actuator.

These standardized communication networks and intelligent valve controls will reduce installation costs (wiring & conduit) and start-up expense, reduce I/O costs, reduce panel space and MCC requirements, reduce ongoing power consumption and enable valve and instrument diagnostics.

Conventional System

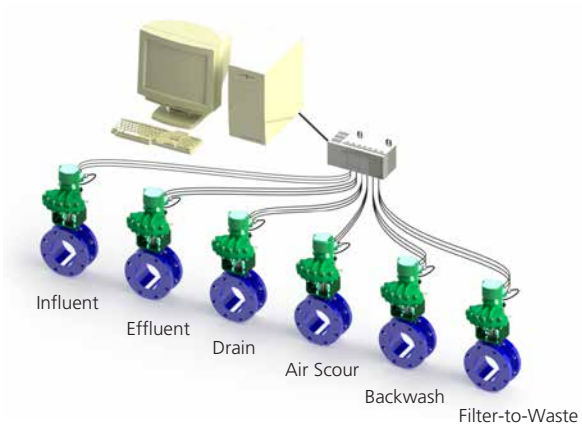

Bus Network

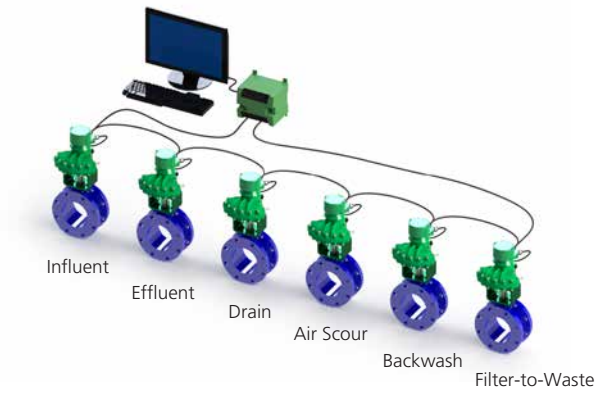

Conventional actuator wiring networks attach each of the inputs and outputs (I/O) to a central location, resulting in multiple wire runs (up to eight wires per actuator). Large expenditures are needed for cabling, conduit, installation and I/O points. Add high-voltage supply power, circuit breakers and MCC's to the equation with electric actuators.

K-TORK Bus Network-controlled actuators will interconnect with other instruments, sensors and field devices to form plant intranets. There are a variety of ways to wire a Bus Network that will provide redundancy and reliability, while significantly reducing the project budget for traditional wiring and conduit. Bus Networks are designed for use with both discrete (O/C) and analog (Modulating) valve actuators and will interface with existing SCADA, PC, DCS and PLC systems. Additionally, the low-voltage 24 VDC system consumes very little power and is easily supported with a UPS back-up power supply to maintain operations during a power outage.

Protocol(s) Selections

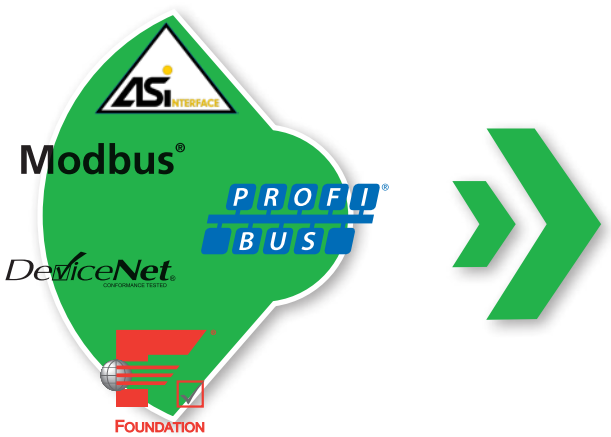

Considerations

- Instrument Functionality
- Instrument Availability
- Instrument Cost
- Control Architecture Compatibility
- Process Suitability
- Compatibility with Protection Concept(s)
- Instrument Geographic Dispersion
- Techology Migration

Gears & Air Fail-Safe Actuators

Manual Override

The K-TORK de-clutch gearbox manual override mounts between the actuator and the valve to provide for manual valve operation in the event of air failure.

Features and Options

- No additional mounting parts required. Can be easily added to any actuator
- Will lock-and-hold valve in any position
- Remains attached to valve with vane actuator removed for maintenance or repair
- Tamper-proof option for lock-out feature to ensure valve remains in position
- Dual, mechanical travel stops standard
- Cast iron housing, hardened steel worm and bronze sector gear for long service life
- Standard with high-temperature grease, permanently lubricated

Air Fail-Safe Actuator

K-TORK Air-Fail-Safe Actuators incorporate an integral air accumulator to fail valve in desired position upon loss of air pressure, electrical power, or both.

Features and Options

- Economical alternative to large, heavy mechanical spring-return actuators
- Will not allow valve / actuator to "drift" during periods of low supply air pressure
- Easily field reversible to change fail position
- Capable of multiple valve cycles after loss of supply air

Performance Data

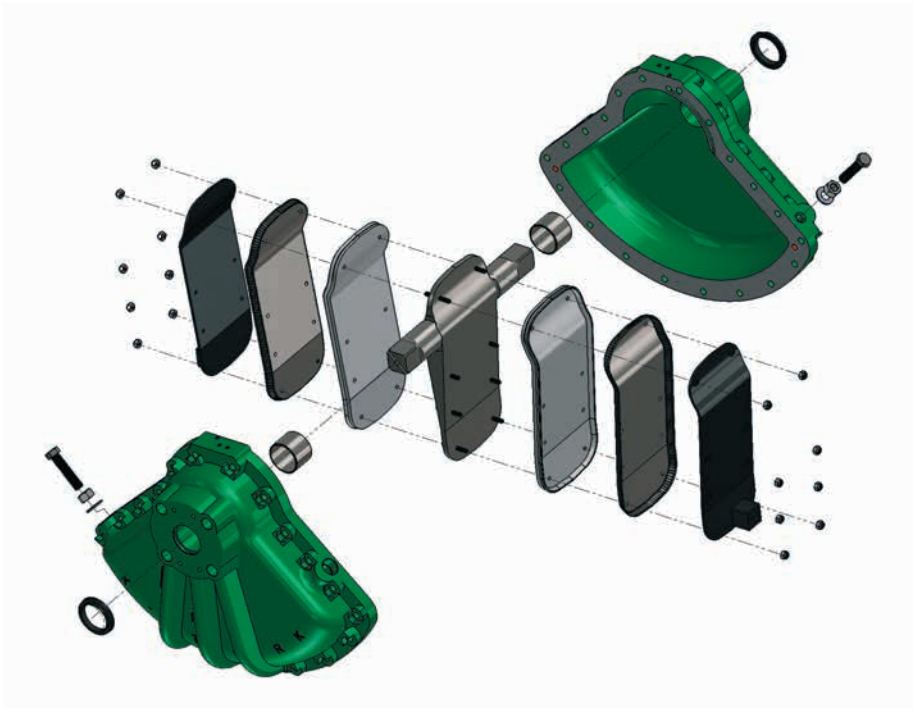

Displaced Volume, cu. in. (cu. cm)

Model	K-1	K-2	K-3	K-4	K-5	K-6	K-7
cu. in	21	44	105	250	511	1,153	2,306
cu. cm	348	720	1,720	4,084	8,393	18,887	37,774

Note: Volume of air required for (1) one 90° operation

Materials of Construction

Item	QTY	Description	Material
1	1	Vane and Output Shaft	High Tensile Alloy Steel / Electroless Nickel Plated
2	2	Vane Seal	Polyurethane, 175 °F (80 °C) / K-Seal, 300 °F (150 °C)
3	2	Vane Seal Expander	Stainless Spring Steel
4	2	Vane Seal Side Plate	Carbon Steel, Epoxy Finish
5	2	Case Half	K-1 to K-4 A413 Aluminum / K-5 to K-7 A356 Aluminum
6	2	Shaft Bushing	PTFE Lined Steel Backed Bronze Bushing
7	2	Shaft Seal	Nitrile, 175 °F (80 °C) / K-Seal, 300 °F (150 °C)
8	2	Locator Pin	Mild Steel
9	2	Stop Bolt O-Ring	Nitrile, 175 °F (80 °C) / K-Seal, 300 °F (150 °C)
10	LOT	Hardware	Stainless Steel
11	LOT	Interior/Exterior Finish	TGIC - Polyester Epoxy Powder Coat

Actuator Weights (Double-Acting)

Model	K-1-DA	K-2-DA	K-3-DA	K-4-DA	K-5-DA	K-6-DA	K-7-DA
lb	6.0	11.5	21.2	40.3	105	220	370
kg	2.7	5.2	9.6	18.3	47.7	100.0	168.2

Actuator Weights (Spring-Return)

Model	K-1-DA	K-2-DA	K-3-DA	K-4-DA
lb	13.2	28.0	55.6	150.3
kg	6.0	12.7	25.3	68.3

Working Temperature Range:	Polyurethane -20 to +175 °F (-30 to +80 °C)
High Temperature Seal:	K-SEAL -20 to +300 °F (-30 to +149 °C)
Maximum Working Pressure*:	150 PSI (10 bar)
Maximum Overload Pressure:	225 PSI (15 bar)

***Per AWWA-C-540, Power Actuating Devices**

Model Number Designation

Example Model Number **K - 3 - SR - 80 - CCW - ST - M - 0 - 0**

Actuator Type
K = K-TORK Vane

Actuator Size
K-1 thru K-7

Actuator Function
DA = Double-Acting
SR = Spring-Return [1]

Supply Pressure (PSI) [1]
NA = Not Applicable Double-Acting
Note pressure for Spring-Return Units

Fail Direction
CCW = Counter-Clockwise
CW = Clockwise
N = None, Double-Acting, Fail-Last

Temperature
LT = Low Temperature Grease
ST = Standard Temperature, +175 °F / 80 °C
HT = High Temperature, + 300 °F / 150 °C

Manual Override [2]
0 = None
M = De-Clutch 'Sandwich' Gear Box

Corrosion Resistance [3]
0 = Standard Finish, TGIC Epoxy Powder-Coat
R = RANGER CG - Corrosion Guard Finish

Air Ports and Mounting Holes
0 = Imperial
1 = Metric

Notes:
1 - Spring-Return Actuators factory set for 80 PSI balance unless specified
2 - All De-Clutch Gear Overrides standard high-temp grease and seals
3 - All Actuators standard with stainless steel travel stops and fasteners

Torques and Dimensions – Double-Acting

Double Acting Torque Output (inch-lbs.)

Model	Operating Pressure								
	40 PSI	50 PSI	60 PSI	70 PSI	80 PSI	90 PSI	100 PSI	125 PSI	150 PSI
K-1	384	492	600	720	840	960	1,080	1,344	1,620
K-2	816	1,044	1,272	1,524	1,776	2,016	2,280	2,844	3,420
K-3	1,860	2,400	2,892	3,432	3,960	4,476	4,992	6,240	7,488
K-4	4,548	5,796	6,996	8,292	9,600	10,800	12,000	15,000	18,000
K-5	10,596	13,392	16,092	18,792	21,600	24,300	27,000	33,744	40,500
K-6	22,200	28,296	34,500	41,292	48,000	54,492	60,000	75,000	90,000
K-7	47,500	60,000	73,000	86,500	100,000	111,500	125,000	155,000	N/A

Double Acting Torque Output (Nm)

Model	Operating Pressure							
	3 Bar	4 Bar	5 Bar	6 Bar	7 Bar	8 Bar	9 Bar	10 Bar
K-1	47	65	84	104	123	141	157	176
K-2	101	138	179	219	261	298	335	373
K-3	231	315	402	488	572	654	736	818
K-4	563	763	974	1,179	1,376	1,573	1,769	1,966
K-5	1,308	1,757	2,203	2,654	3,097	3,539	3,981	4,424
K-6	2,750	3,758	4,856	5,938	6,882	7,865	8,849	9,832
K-7	5,900	7,900	10,100	12,150	14,200	16,400	18,300	N/A

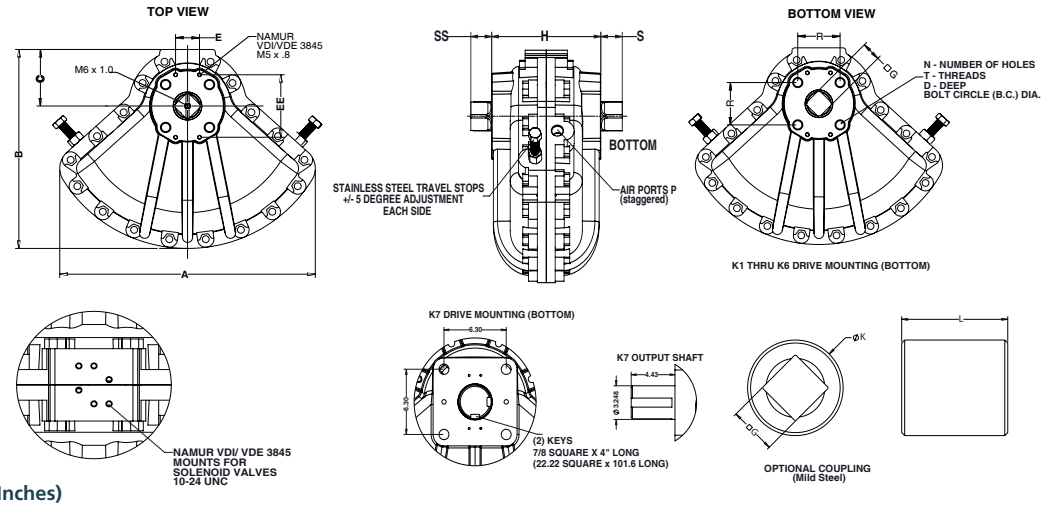

English Units (Inches)

Model	A	B	C	E	EE	G	H	S	SS	N	T	D	R	B.C. DIA	P (NPT)	K	L	WT (lbs)
K-1	8.00	6.43	1.95	1.18	3.15	0.63	3.94	0.80	0.80	4	5/16-18	0.62	1.42	2.01	1/4	1.25	1.57	6.00
K-2	9.87	8.08	2.37	1.18	3.15	0.75	4.95	1.03	0.80	4	3/8-16	0.75	1.80	2.54	1/4	1.50	1.97	11.50
K-3	12.61	10.04	2.80	1.18	3.15	0.98	6.15	1.22	1.18	4	1/2-13	0.94	2.16	3.05	3/8	2.00	2.22	21.20
K-4	16.35	12.91	3.60	1.18	3.15	1.12	7.87	1.50	1.18	4	5/8-11	1.25	2.75	3.89	1/2	2.25	2.50	40.30
K-5	22.53	17.85	5.41	1.18	3.15	1.61	10.87	2.18	1.18	4	7/8-9	1.63	4.25	6.02	1/2	3.34	3.54	105.00
K-6	28.50	22.95	6.70	1.18	5.12	2.24	14.22	3.06	1.97	4	1 1/8-7	2.00	6.30	8.91	1/2	5.00	5.13	220.00
K-7	30.12	23.77	7.15	1.18	5.12	N/A	22.45	N/A	1.97	8	1 1/8-7	2.00	6.30	8.91	1.0	N/A	N/A	370.00

Metric Units (mm)

Model	A	B	C	E	EE	G	H	S	SS	N	T	D	R	B.C. DIA	P (NPT)	K	L	WT (kg)
K-1	203.2	163.3	49.5	30.0	80.0	16.0	100.1	20.3	20.3	4	5/16-18	15.7	36.1	51.1	1/4	31.8	39.9	2.7
K-2	250.7	205.2	60.2	30.0	80.0	19.1	125.7	26.2	20.3	4	3/8-16	19.1	45.7	64.4	1/4	38.1	50.0	5.2
K-3	320.3	255.0	71.0	30.0	80.0	24.9	156.2	31.0	30.0	4	1/2-13	23.9	54.9	77.5	3/8	50.8	56.4	9.6
K-4	415.3	327.9	91.4	30.0	80.0	28.4	199.9	38.1	30.0	4	5/8-11	31.8	69.9	98.8	1/2	57.2	63.5	18.3
K-5	572.3	453.4	137.4	30.0	80.0	40.9	276.1	55.4	30.0	4	7/8-9	41.4	108.0	152.9	1/2	84.8	89.9	47.7
K-6	723.9	582.9	170.2	30.0	130.0	56.9	361.2	77.7	50.0	4	1 1/8-7	50.8	160.0	226.3	1/2	127.0	130.3	100.0
K-7	765.0	603.8	181.6	30.0	130.0	N/A	570.2	N/A	50.0	8	1 1/8-7	50.8	160.0	226.3	1.0	N/A	N/A	168.2

Torques and Dimensions – Spring-Return

Spring-Return Torque Output (inch-lbs.)

Actuator Model	Air & Spring Torque	PSI				
		60	65	70	75	80
K-1	Start	320	355	380	415	450
	End	255	300	330	350	410
K-2	Start	690	750	790	850	920
	End	510	595	685	710	800
K-3	Start	1,610	1,750	1,880	1,985	2,100
	End	1,250	1,390	1,500	1,650	1,790
K-4	Start	3,875	4,205	4,510	4,860	5,175
	End	2,865	3,195	3,620	3,850	4,150

Spring-Return Torque Output (Nm)

Actuator Model	Air & Spring Torque	bar				
		4.1	4.5	4.8	5.2	5.5
K-1	Start	36	40	42	46	50
	End	29	33	37	39	46
K-2	Start	78	84	89	96	104
	End	57	67	77	80	90
K-3	Start	181	197	212	224	237
	End	141	157	169	186	202
K-4	Start	438	475	510	550	585
	End	324	361	410	435	469

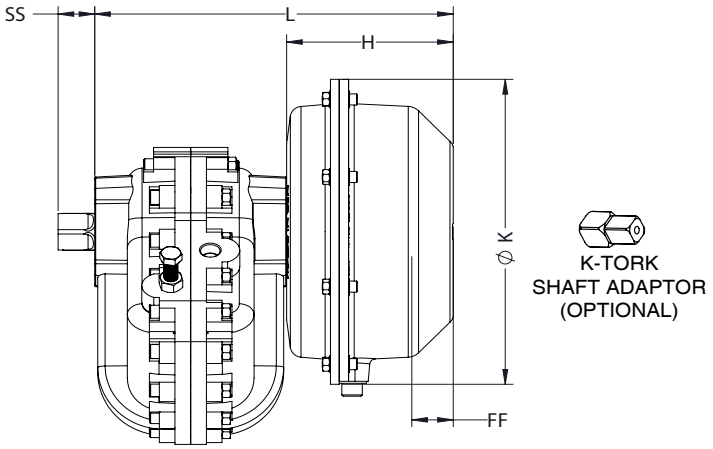

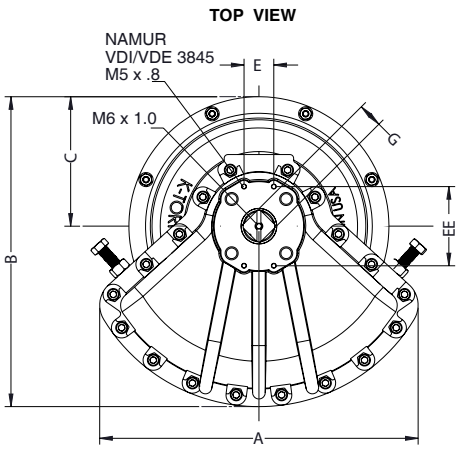

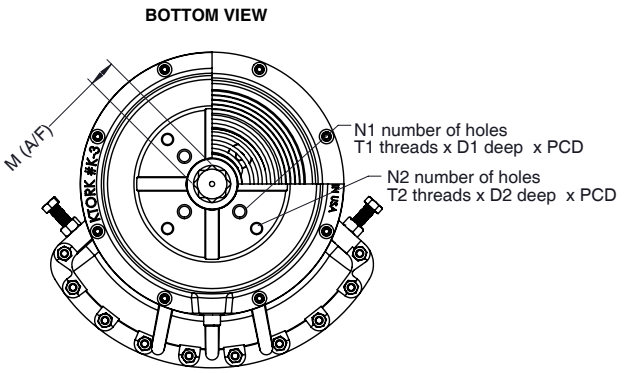

English Units (Inches)

Model	A	B	C	E	EE	G	FF	H	K (dia.)	L	SS	M (A/F)	N1	T1	D1	PCD1	N2	T2	D2	PCD2	WT (lbs)	ISO 5211
K-1	8.00	7.49	3.05	1.18	3.15	0.63	0.92	3.23	6.10	7.17	0.79	0.67	4	5/16-18	0.62	2.01	4	M8 x 1.25	.63	2.76	13.20	F7
K-2	9.87	9.70	4.04	1.18	3.15	0.75	1.17	3.69	8.08	8.64	0.79	0.87	4	3/8-16	0.65	2.55	4	M10 x 1.5	.65	4.02	28.00	F10
K-3	12.61	12.33	5.15	1.18	3.15	0.98	1.33	5.35	10.30	11.51	1.18	1.06	4	1/2-13	1.00	3.06	4	M12 x 1.75	.95	4.92	55.60	F12

Metric Units (mm)

Model	A	B	C	E	EE	G	FF	H	K (dia.)	L	SS	M (A/F)	N1	T1	D1	PCD1	N2	T2	D2	PCD2	WT (kg)	ISO 5211
K-1	203.2	190.2	77.5	30.0	80.0	16.0	23.4	81.9	154.9	182.1	20.1	17.0	4	5/16-18	15.7	51.1	4	M8 x 1.25	1/4	70.0	6.0	F7
K-2	250.7	246.4	102.6	30.0	80.0	19.1	29.7	93.7	205.2	219.5	20.1	22.0	4	3/8-16	16.5	64.8	4	M10 x 1.5	1/4	102.0	12.7	F10
K-3	320.3	313.2	130.8	30.0	80.0	24.9	33.8	135.9	261.6	292.4	30.0	27.0	4	1/2-13	25.4	77.6	4	M12 x 1.75	1/4	125.0	25.3	F12

Accessories

K-TORK provides actuator control and air quality accessories to ensure long, trouble-free operation of your automated valve system.

K-TORK #XP-1000 I/P Converter

- For close-coupled or remote mount
- FM and CSA approved
- Immune to RFI and EMI effects
- 4-20 mA input / 3-15 PSI output

K-TORK #K-IN-SC Inline Speed Controls

- Precision adjustable inline speed control
- Suitable for integral mount or remote mount
- Can be locked in position once valve travel speed is set

K-TORK #K-EX-SC Exhaust Speed Controls

- Precision, adjustable exhaust speed control
- Includes noise-reducing muffler
- Can be locked in position once valve travel speed is set

K-TORK Air System Components

- Air filter regulators
- Air lock-up valves
- Automatic blow-down drains

Rotork – Fairchild #T6100 "Fail-Last" I/P Transducer

- Used with K-TORK #C-400 conventional positioner
- 4-20 mA input, close-coupled or remote mount
- Locks in "Last Position" to accurately capture set point
- Extremely low drift after power loss to maintain set point

Rotork – Fairchild #M63 Pneumatic Filter Regulator

- 5-Micron filter minimizes contamination
- Non-bleed design with integral relief valve and soft seat
- No-brass construction is well-suited to harsh environments
- Standard tapped exhaust port and convenient gauge port
- Filter dripwell with drain plug for trapped liquids

Projects, Services and Retrofit

rotork® Site Services

Rotork Site Services are integral to our operating divisions, delivering projects, service and retrofit. Site Services staff are based out of 47 service centres in over 20 countries around the world, complemented by agents in another 55 countries. In total we have over 1000 expert technicians supporting Rotork customers.

Rotork Site Services provides a comprehensive range of service products, each specifically tailored to meet customers' requirements.

Visit www.rotork.com to identify your nearest Rotork Site Services centre.

Emergency and planned service

We provide a full range of actuator services, covering any type of actuator in any location, including hazardous environments. Our services include installation, commissioning and upgrading as well as connection and installation of bus communication systems. We are also skilled at troubleshooting and repairing damaged or deteriorating assets. Depending on your requirements, we can offer guaranteed emergency response times or planned response.

Actuator overhauls

After a long service life it is sometimes preferable to overhaul rather than replacing actuators. In our workshops we completely strip and rebuild actuators, returning them to their original state.

Health checks

To help customers understand the state of their plant and assets, to better inform maintenance and replacement decisions, we offer full inspection and reporting. In addition to a detailed and intrusive inspection of the actuators, we offer extra insights from our original factory build data.

Preventative maintenance

To maximise plant up-time and minimise operating costs we offer clients a range of preventative maintenance programmes. We tailor the service in every case to reflect the type of actuators in service, the availability of asset information and the criticality of the plant.

Retrofitting actuators to existing valves

We have extensive experience in fitting actuators to valves, penstocks and dampers that are already installed as part of existing plant. Whether customers are replacing obsolete actuators, changing power sources or motorising manual valves, we offer a tailor made solution to meet customers' specific requirements.

Shutdown outages

For those customers who run tightly-scheduled shutdowns, we engage closely in the project to help meet demanding deadlines. A typical example might involve our staff removing large numbers of actuators, overhauling them in our workshops and re-commissioning them as part of the maintenance of a larger unit.

Factory fitting of actuators to new valves

The careful assembly of valve and actuator is critical to ensure that an automated valve performs correctly and reliably. Whilst this service is often carried out by valve manufacturers, if there is a need we can provide this service.

Extended scope projects

This is a growing requirement and some of our service teams have the wide range of skills necessary to offer a "one-stop-shop" to automate part or all of a customer's process. Our capabilities cover all of the installation phases (scoping, design, procurement, manufacturing, installation, commissioning) on the broad scopes that typically surround actuation projects.

rotork®

Redefining Flow Control

www.**rotork**.com

A full listing of our worldwide sales and service network is available on our website.

UK
Rotork plc
tel +44 (0)1225 733200
fax +44 (0)1225 333467
email mail@rotork.com

USA
K-TORK International Inc.
tel +1 (214) 343-9980
fax +1 (214) 343-2658
email info@ktork.com

Scan with your smart phone for more information on this product range

PUB097-001-00
Issue 02/12

As part of a process of on-going product development, Rotork reserves the right to amend and change specifications without prior notice. Published data may be subject to change. For the very latest version release, visit our website at www.rotork.com

The names Rotork, K-TORK, SIDEWINDER and Informer are registered trademarks. Rotork recognises all registered trademarks. Published and produced in the UK by Rotork Controls Limited. POWTG0713